Régie du bâtiment Québec

Direction générale de l'inspection

Montréal, 28 septembre 2022.

MADAME TANYA FRANCIS
TECHNICAL STANDARDS & SAFETY AUTHORITY
345 CARLINGVIEW DRIVE
TORONTO ON
CANADA M9W 6N9

Fabricant : GUNTNER DE MEXICO S.A. DE C.V.
ROGELIO GONZALEZ CABALLERO 1000
APODACA NUEVO LEON
MEXICO 66000

Numéro de dossier : 947331
Numéro(s) de dessin(s) : AS PER SCOPE OF REGISTRATION
DWG : 300-0000831372 REV 0

Objet : Enregistrement des plans et devis – Confirmation de l'enregistrement

Bonjour,

Nous vous informons que votre demande d'enregistrement de plans et devis a été traitée et que cette conception a été enregistrée sous le numéro d'enregistrement canadien (NEC\CRN) : **0H020482.56**

Nous portons votre attention sur certaines exigences réglementaires concernant les installations sous pression, ainsi que des codes et normes qui y sont associés :

- Le fabricant doit maintenir un programme de contrôle de la qualité valide pour fabriquer un équipement selon ce NEC;
- Ce numéro d'enregistrement demeure valide tant et aussi longtemps que les paramètres de conception demeurent inchangés. Dans le cas d'accessoires, l'enregistrement est valide pour une durée de 10 ans à partir de la date de conception doivent alors être resoumis pour validation;
- Le fabricant doit nous transmettre une copie de l *Déclaration de conformité du constructeur (Manufacturer's Data Report)* pour chaque appareil ou chaudière fabriqu selon ce NEC dans les 30 jours suivant la signature de cette déclaration;
- Le numéro de dessin enregistré et le numéro de révision doivent être indiqués sur la déclaration de conformité pour les équipements fabriqués selon ce NEC.

Le présent avis d'approbation ne dégage pas le fabricant de ses responsabilités quant à la conception ou à la construction des équipements ou d'accessoires fabriqués selon un NEC.

Bureau d'expertise et d'homologation en équipements sous pression

Montréal
545, boul. Crémazie Est, 7ième étage
Montréal (Québec) H2M 2V2
Téléphone : 514 873-6459
Sans frais : 1 866 262-2084
www.rbq.gouv.qc.ca

Régie du bâtiment Québec

Direction générale de l'inspection

Montréal, le 28 septembre 2022.

MRS. TANYA FRANCIS
TECHNICAL STANDARDS & SAFETY AUTHORITY
345 CARLINGVIEW DRIVE
TORONTO ON
CANADA M9W 6N9

Manufacturer : GUNTNER DE MEXICO S.A. DE C.V.
ROGELIO GONZALEZ CABALLERO 1000
APODACA NUEVO LEON
MEXICO 66000

OUR REFERENCE : 947331
Design number : AS PER SCOPE OF REGISTRATION
DWG: 300-0000831372 REV 0

Subject: Design registration confirmation

Hi,

We wish to inform you that your design registration application has been evaluated and that it was registered under the following Canadian Registration Number (CRN): **0H20482.56.**

The following is a reminder of your obligations regarding certain requirements of the regulation respecting pressure vessels, and the referenced codes and standards:

- The manufacturer must maintain a valid quality control program to manufacture equipment according to the CRN.
- The CRN remains valid as long as there are no changes to the design calculations that might affect the pressure boundary. The design registration of fittings expires 10 years after acceptance. It must, therefore, be resubmitted for validation.
- The manufacturer shall submit a copy of the *Manufacturer's Data Report* to us for each equipment manufactured according to this CRN within 30 days following the signing of this report.
- The drawing number and the revision number registered under this CRN must be indicated on the *Manufacturer's Data Report* for equipment manufactured according to the CRN.

This notice of approval does not relieve the manufacturer of their responsibilities with respect to the design or fabrication of equipment manufactured according to this CRN.

Yours sincerely,

Bureau d'expertise et d'homologation en équipements sous pression

Montréal
545, boul. Crémazie Est, 7ième étage
Montréal (Québec) H2M 2V2
Téléphone : 514 873-6459
Sans frais : 1 866 262-2084
www.rbq.gouv.qc.ca

Régie du bâtiment Québec

Statutory Declaration Registration of Fittings

(a) Design Qualification

I[1] JAMISON DITTHARDT
(Name of applicant)

PRODUCT AND SOLUTIONS DEVELOPMENT MANAGER
(Position eg, president, plant manager, chief eng.)

of GUNTNER DE MEXICO, S.A. DE C.V.
(name of company)

Located at Av. Rogelio Gonzalez Caballero No. 1000, Parque Industrial Stiva Aeropuerto, 66600 Apodaca, N.L., Mexico
(plant address)

do solemnly declare that the fittings listed hereunder, which are subject to the Boilers & Pressure Vessels Act:

☒ comply with all the requirements of the ANSI/ASME codes as to their dimensions, material, identification & service for which are required: ASME SECTION VIII-1, ASME B31.3, ASME B31.5

Or

☐ are not covered by the provisions of the ANSI/ASME codes, and are therefore constructed to comply with _____ _____ code and standard, and are designed to the best current engineering practice, as shown by the supporting test data.

(b) Quality control of Manufacture

I further declare the manufacture of these fittings is controlled by a quality control program which complies with the requirements of ISO 9001, and has been verified by the following authority or authorized agency TUV-SUD

The fittings[2] covered by this declaration, for which I seek registration, are CATEGORY H FITTINGS - HEAT EXCHANGER

In support of the application, the following information, calculations and/or test data are attached:
SCOPE OF CRN, DRAWINGS, CALCULATIONS, REPORTS

Declared before me at CHICAGO

In the of COOK of ILLINOIS

The 17 day of DEC AD 2020

OFFICIAL SEAL
MELISSA SANCHEZ
NOTARY PUBLIC - STATE OF ILLINOIS
MY COMMISSION EXPIRES:09/30/23

(A commissioner for oaths)

Jamison Ditthardt
Signature of Declarer[3]

For Official Use Only

The application is accepted for registration in Category _____ in accordance with the Boilers and Pressure Vessels Act and CSA Standard B51.

This registration must be revalidated after ten (10) years from the date of acceptance.

Registered Number CRN _____

For the Chief Inspector _____

Date _____

Enregistré au Québec
0H20482.56
Régie du bâtiment Québec
21/09/2022
Revue par la RBQ

[1] Three completed copied of Statutory Declaration form together with three copies of Catalogs, drawings of Bulletins illustr... fittings shall be submitted.
[2] All fittings are required to be registered in the name of the Manufacturer.
[3] This form shall be completed and signed by the president of highest official in the manufacturing plan where the fitting is produced.

\\CORBIN\STATUTORY DECLARATION REGISTRATION OF FITTINGS.DOC

GUNTNER DE MEXICO S.A. DE C.V.
ROGELIO GONZALEZ CABALLERO NO. 1000
PARQUE INDUSTRIAL STIVA AEROPUERTO
APODACA, NUEVO LEON
MEXICO CP 66600

Enregistré au Québec
0H20482.56
Régie du bâtiment Québec
21/09/2022
Revue par la RBQ

19-Mar-22

THIS IS PART OF CRN
0H20482.5ADD1
Technical Standards and Safety Authority
Boilers and Pressure Vessels Safety Program

SCOPE OF CRN REGISTRATION

Product Description	Drawing No.	Design Code	MAWP at MAWT	Material Specification	Header "d2" Connection Sizes	Report Number
Heat Exchanger	300-0000931372 Rev. 0	ASME Section VIII-1	120 barg at 140°C / 1740 psig at 284°F	Stainless Steel **(Note 3)** ASME SA312-304/304L/316/316L, ASME SA249-304/304L/316/316L, ASME SA240-304/304L/316/316L, ASME SA479-304/304L/316/316L, ASME SA182-304/304L/316/316L, ASME SA403-304/304L/316/316L	1/2" Sch. 40, 3/4" Sch. 40, 1" Sch. 40, 1-1/4" Sch. 40 1-1/2" Sch. 40 2" Sch. 40 2-1/2" Sch. 40	R-1227A Rev. 0
Header "d2" Extensions	Extensions for Heat Exchanger shown on drawing 300-0000931372 Rev. 0	ASME B31.3, ASME B31.5.	120 barg at 140°C / 1740 psig at 284°F	Carbon Steel ASTM A53-E/B, ASTM A106-B	1/2" Sch. 40, 3/4" Sch. 40, 1" Sch. 40, 1-1/4" Sch. 40 1-1/2" Sch. 40 2" Sch. 40 2-1/2" Sch. 40	R-1227B Rev. 0
Header "d2" Extensions	Extensions for Heat Exchanger shown on drawing 300-0000931372 Rev. 0	ASME B31.3, ASME B31.5.	70 barg at 140°C / 1015 psig at 284°F	Copper ASTM B543 UNS C19400 W061	1/2" x 1.5 mm wall thk. 3/4" x 1.9 mm wall thk. 1" x 1.9 mm wall thk. 1-1/4" x 2.7 mm wall thk. 1-1/2" x 2.7 mm wall thk. 2" x 3.55 mm wall thk.	R-1227B Rev. 0
Header "d2" Extensions	Extensions for Heat Exchanger shown on drawing 300-0000931372 Rev. 0	ASME B31.3, ASME B31.5.	70 barg at 140°C / 1015 psig at 284°F	Copper ASTM B543 UNS C19400 WC55	1/2" x 1.5 mm wall thk. 3/4" x 1.9 mm wall thk. 1" x 1.9 mm wall thk. 1-1/4" x 2.7 mm wall thk. 1-1/2" x 2.7 mm wall thk. 2" x 3.55 mm wall thk.	R-1227B Rev. 0

Note 1: MAWP = Maximum Allowable Working Pressure, MAWT = Maximum Allowable Working Temperature,
Note 2: For low temperature operation the products shall conform to the rules of the applicable codes under which they are used.
Note 3: In all cases stainless steel shall be dual rated Type 304/304L or Type 316/316L.

HEAT EXCHANGER WITH CAPILLAR

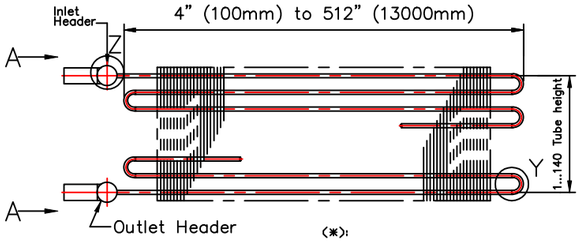

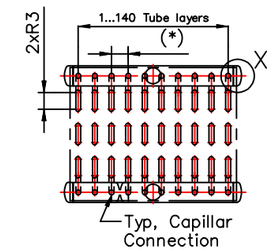

SECTION A–A

(*):
HEADER SIZES 1/2" THRU 4"
For tube 0.472" (12.00mm) distance is 1.969" (50mm)
For tube 0.591" (15.00mm) distance is 1.969" (50mm)

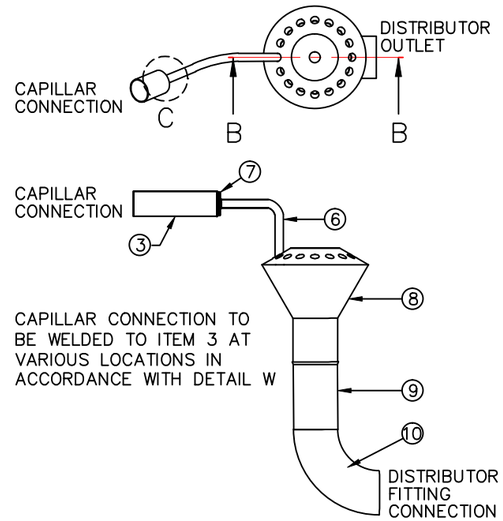

Enregistré au Québec
0H20482.56
Régie du bâtiment Québec
21/09/2022
Revue par la RBQ

BILL OF MATERIALS

POS	DESCRIPTION	IDENT.	MATERIAL	ASME STANDARD
1	HEADER	d1 x s1	STAINLESS STEEL	SA-312-304/304L,316/316L
2	CONNECTION (SEE SHT 2 OPTIONS)	d2 x s2	STAINLESS STEEL	SA-312-304/304L,316/316L
3	CORE TUBE	d3 x s3	STAINLESS STEEL	SA-249-304/304L,316/316L
4	ELBOW	d3 x s3	STAINLESS STEEL	SA-249-304/304L,316/316L
5	HEADER FLAT PLATE	d5 X s5	STAINLESS STEEL	SA-240-304/304L,316/316L
6	CAPILLAR	d6 X s6	STAINLESS STEEL	SA-249-304/304L,316/316L
7	CAPILLAR PLATE	d7 X s7	STAINLESS STEEL	SA-479-304/304L,316/316L
8	DISTRIBUTOR COMPLETE WITH CRN		STAINLESS STEEL	SA-182-304/304L,316/316L
9	DISTRIBUTOR PIPE	d2 x s2	STAINLESS STEEL	SA-312-304/304L,316/316L
10	DISTRIBUTOR FITTINGS	d2 x s2	STAINLESS STEEL	SA-403-304/304L,316/316L

NOTE 1: SEE SHEET 2 FOR OPTIONAL d2 CONNECTION EXTENSIONS
NOTE 2: ONLY DUAL RATED 304/304L OR 316/316L MATERIAL TO BE USED.

VALUES FOR a IN INCHES (REQUIRED WELD SIZE)

MATERIAL		CONNECTION (d2 X s2 OR d3 X s3) NOTE: Heavier wall pipe or tube may be substituted.	HEADER NOMINAL PIPE SIZE (d1) 1/2" Sch.40	3/4" Sch.40	1" Sch.40	1-1/4" Sch.40	1-1/2" Sch.40	2" Sch.40	2" Sch.80	2-1/2" Sch.40	3" Sch.80	4" Sch.80
TYPE 304/304L SS DUAL RATED, TYPE 316/316L SS DUAL RATED	d3	0.472" X 0.028" (12MM X 0.70MM)	0.05	0.05	0.05	0.05	0.05	0.05		0.05	0.05	0.05
	d3	0.591" X 0.039" (15MM X 1.00MM)	0.07	0.07	0.07	0.07	0.07		0.07	0.07	0.07	0.07
	d3	0.591" X 0.032" (15MM X 0.80MM)	0.06	0.06	0.06	0.06	0.06		0.06	0.06	0.06	0.06
	d2	1/2" SCH.40			0.11	0.11	0.11	0.13	0.11	0.15	0.11	0.20
	d2	3/4" SCH.40				0.12	0.12	0.20	0.12	0.21	0.17	0.28
	d2	1" SCH.40					0.14	0.21	0.14	0.23	0.19	0.32
	d2	1-1/4" SCH.40						0.29	0.22*	0.30	0.26	0.39
	d2	1-1/2" SCH.40								0.34	0.30	0.44
	d2	2" SCH.40									0.44*	0.53
	d2	2-1/2" SCH.40										0.53

NOTE 1: CORE TUBES(d3) ATTACHED TO HEADER IN ACCORDANCE WITH FIGURE UW-16.1(W-1).

NOTE 2: THE WELD SIZES STATED TO ATTACH d2 TO d1 ARE DETERMINED IN ORDER TO MEET THE REINFORCEMENT REQUIREMENTS SPECIFIED IN UG-37. IN ACCORDANCE WITH UG-36(C)(3) SMALLER OR EQUAL WELD SIZES IN ACCORDANCE WITH FIGURE UW-16.1(A) MAY BE USED IF IT CAN BE CONFIRMED THAT THE NOZZLE DOES PASS THROUGH A CATEGORY A JOINT. THIS OPTION DOES NOT APPLY TO WELD SIZES FOLLOWED BY A *. FOR WELD SIZES FOLLOWED BY A * THE WELD SIZE SHOWN SHALL BE USED IN ALL CIRCUMSTANCES.

DETAIL Z Connection – Header – Stub

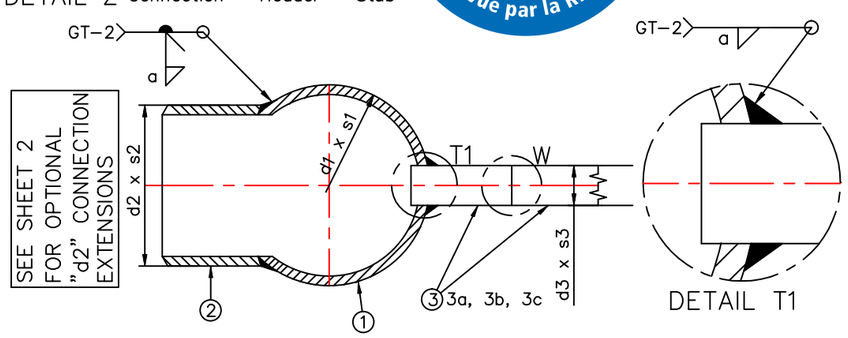

DETAIL W Stub – Core Tube

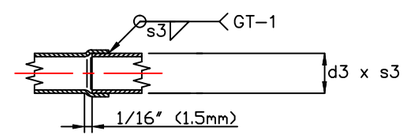

DETAIL X Connection – Flat Plate

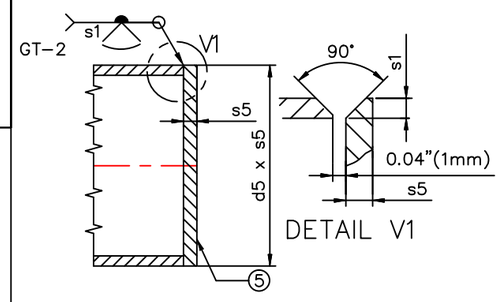

DETAIL C Core Tube–Plate–Capillary

NOTE: CAPILLAR TUBES(d6) ATTACHED TO CAPILLAR PLATE IN ACCORDANCE WITH FIGURE UW-16.1(I).

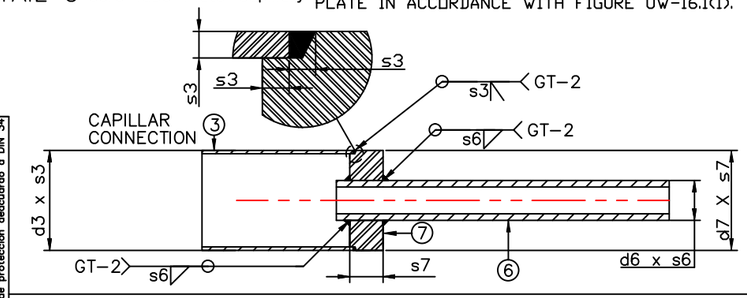

DETAIL Y Core Tube – Elbows

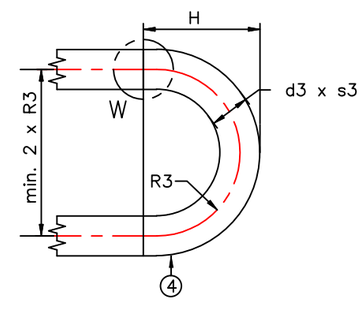

SECTION B–B Capillary – Distributor – Tube – Elbow

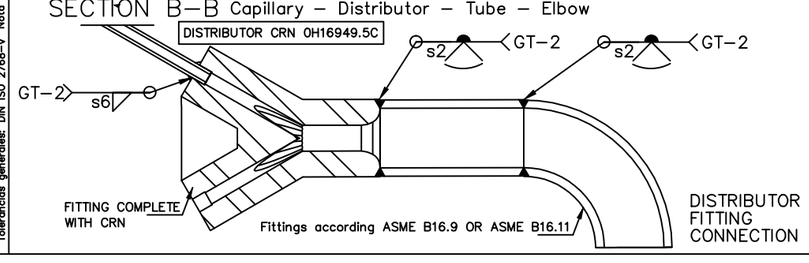

HEADER(1) AND CONNECTION(2) COMBINATIONS AND HEADER FLAT PLATE(5) DETAILS

HEADER (1) d1xs1	MAX CONNECTION SIZE (2) d2xs2	FLAT PLATE MIN. THK. TP (5) d5xs5
1/2" SCH.40		0.840" x 0.250"
3/4" SCH.40		1.050" x 0.250"
1" SCH.40	1/2" SCH.40	1.315" x 0.312"
1-1/4" SCH.40	3/4" SCH.40	1.660" x 0.438"
1-1/2" SCH.40	1" SCH.40	1.900" x 0.438"
2" SCH.40/80	1-1/4" SCH.40	2.375" x 0.438"
2-1/2" SCH.40	1-1/2" SCH.40	2.875" x 0.563"
3" x SCH.80	2" SCH.40	3.500" x 0.625"
4" SCH.80	2-1/2" SCH.40	4.500" x 0.750"

NOTE: Available connection sizes d2 x s2 are: 1/2" SCH.40, 3/4" SCH.40, 1" SCH.40, 1-1/4" SCH. 40, 1-1/2" SCH. 40, 2" sch. 40, 2-1/2" SCH. 40.

CORE TUBE (3) COMBINATIONS AND DETAILS

d3	s3	R3	H
0.472" (12.00 mm)	0.028" (0.70mm)	0.689" (17.50 mm)	0.807" (20.50 mm)
0.472" (12.00 mm)	0.028" (0.70mm)	0.984" (25.00 mm)	1.220" (31.00 mm)
0.472" (12.00 mm)	0.028" (0.70mm)	1.575" (40.00 mm)	1.810" (46.00 mm)
0.591" (15.00 mm)	0.032" (0.80mm)	0.689" (17.50 mm)	0.984" (25.00 mm)
0.591" (15.00 mm)	0.032" (0.80mm)	0.984" (25.00 mm)	1.280" (32.50 mm)
0.591" (15.00 mm)	0.039" (1.00mm)	0.689" (17.50 mm)	0.984" (25.00 mm)
0.591" (15.00 mm)	0.039" (1.00mm)	0.984" (25.00 mm)	1.280" (32.50 mm)

CORE TUBE(3), CAPILLAR(6) AND CAPILLAR PLATE (7) DETAILS

CORE TUBE (3) d3Xs3	CAPILLAR (6) d6xs6	CAPILLAR PLATE (7) d7xs7
0.472" X 0.039" MIN. THK. 12.00MM X 1.00MM MIN. THK.	0.157" x 0.039" 4.00MM X 1.00MM	0.374" X 0.197" 9.52MM X 5MM
	0.197" X 0.039" 5.00MM X 1.00MM	
	0.236" X 0.039" 6.00MM X 1.00MM	
0.591" X 0.047" MIN. THK. 15.00MM X 1.20MM MIN. THK.	0.157" x 0.039" 4.00MM X 1.00MM	0.472" X 0.197" 12.00MM X 5MM
	0.197" X 0.039" 5.00MM X 1.00MM	
	0.236" X 0.039" 6.00MM X 1.00MM	

DESIGN CODE	ASME SECTION VIII-DIV.1, 2021
MAXIMUM ALLOWABLE WORKING PRESSURE (MAWP)	1740 PSIG (120 BARG)
MAXIMUM ALLOWABLE EXTERNAL PRESSURE (MAEWP)	NONE
MAXIMUM DESIGN METAL TEMPERATURE	284°F (140°C)
MINIMUM DESIGN METAL TEMPERATURE	-148°F (-100°C)
IMPACT TEST	NOT REQUIRED ACCORDING TO UHA-51(D) FOR MATERIALS
CORROSION	ACCORDING TO UG-25(D) CORROSION IS ONLY SUPERFICIAL NATURE
NDE	CSA B52 REFRIGERANT GROUP A1,B1, A2,B2: NO RT. IN PROCESS PER ASME B31.3 PARA. 344.7 AND ASME B31.5 PARA. 536.6.2. CSA B52 REFRIGERANT GROUP A3,B3: 5% RT PER ASME B31.3 PARA 341.4.1(b) AND ASME B31.5 PARA 536.4.2.
HEAT TREATMENT	NONE
HYDROSTATIC TEST PRESSURE	1.3XMAWP = 2262 PSIG (156 BARG)
SERVICE	FOR NON-LETHAL SERVICE
UNIT CONTENTS	ANY REFRIGERANT ACCORDING TO SAFTEY CLASSIFICATION PER ANSI/ASHRAE 34-2001, CO2, NH3

R-1227

REGISTRATION CRN 0H20482.5ADD1
COVERS THE PIPING SYSTEM ONLY AND DOES NOT INCLUDE REGISTRATION OF BOILERS, PRESSURE VESSELS AND FITTINGS REQUIRED UNDER THE BOILERS AND PRESSURE VESSELS REGULATIONS OF TECHNICAL STANDARDS AND SAFETY ACT
June 1, 2022. TSSA

SHEET 1 OF 2

MAX. PRESSURE 120bar=140°C/-100°C

Tabla de tolerancias
Piezas de lámina: ISO 2768-v Nota de protección descuardo a DIN 34
Soldadura: DIN EN 25817 TE5/A00/006/94/KS
Tolerancias generales: DIN ISO 2768-v

Güntner de México S.A. de C.V.
Rogelio González Caballero #1000
Parque Ind. Silva Aeropuerto
66600 Apodaca, N.L. México
Tel. + 52 81 8156 0600
www.guentner.com.mx

descripcion	fecha	nombre
dib:	13.01.2020	jdelgado
aprb.:		

escala	hoja / tamaño DIN A1
material	
peso [kg]	
notificacion	
tipo	Heat Exchanger Stainless Steel
nombre	Heat Exchanger ST Steel 120bar
Baan-No.	
numero de dibujo	300-0000931372 SHEET 1 OF 2 rev. 0
cliente	
proyecto/cantidad	
orden / posicion	

CARBON STEEL EXTENSION MATERIAL OPTION 1 – DETAIL Z

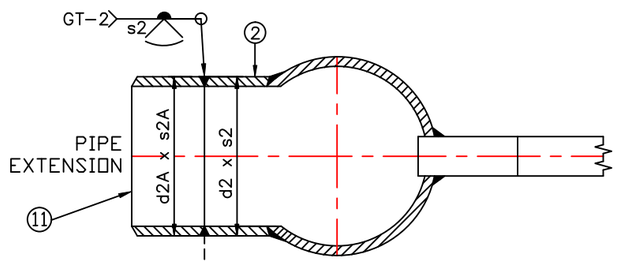

ASTM A53-E/B EXTENSION | HEADER ASSEMBLY PER DRAWING 300-0000931372 SHEET 1 TYPE 304 STAINLESS STEEL

OPTIONAL CARBON STEEL ASTM A53-E/B HEADER EXTENSION ARRANGEMENT

d2 X s2 CONNECTION	d2A X s2A EXTENESION
(Note 1)	1/2" SCH.40
3/4" SCH.40	3/4" SCH.40
1" SCH.40	1" SCH.40
1-1/4" SCH.40	1-1/4" SCH.40
1-1/2" SCH.40	1-1/2" SCH.40
2" SCH.40	2" SCH.40
2-1/2" SCH. 40	2-1/2" SCH. 40

Note 1: d2 x s2 connection wall thickness the same as shown on sheet 1 of drawing

BILL OF MATERIALS

POS	DESCRIPTION	IDENT.	MATERIAL	ASME STANDARD
2	CONNECTION	d2 x s2	STAINLESS STEEL	SA-312-304/304L,316/316L
11	EXTENSION (OPTION 1)	d2A x s2A	CARBON STEEL	ASME SA-53-E/B (Note 2)

NOTE 1: ONLY DUAL RATED 304/304L OR 316/316L MATERIAL TO BE USED.
NOTE 2: NPS 2" PIPE TO BE SA106-B

EXTENSION DESIGN CODE	ASME B31.3 2018, ASME B31.5 2019
MAXIMUM ALLOWABLE WORKING PRESSURE (MAWP)	1740 PSIG (120 BARG)
MAXIMUM ALLOWABLE EXTERNAL PRESSURE (MAEWP)	NONE
MAXIMUM DESIGN METAL TEMPERATURE	284°F (140°C)
MINIMUM DESIGN METAL TEMPERATURE	-20°F (-29°C) FOR CARBON STEEL EXTENSION
IMPACT TEST	EXEMPT
CORROSION	NONE
NDE	CSA B52 REFRIGERANT GROUP A1,B1, A2,B2: NO RT. IN PROCESS PER ASME B31.3 PARA. 344.7 AND ASME B31.5 PARA. 536.6.2. CSA B52 REFRIGERANT GROUP A3,B3: 5% RT PER ASME B31.3 PARA 341.4.1(b) AND ASME B31.5 PARA 536.4.2.
HEAT TREATMENT	NONE
HYDROSTATIC TEST PRESSURE	1.5XMAWP = 2610 PSIG (180 BARG)
SERVICE	FOR NON-LETHAL SERVICE

COPPER EXTENSION MATERIAL OPTION 2 AND 3 – DETAIL Z
CONSTRUCTION DETAIL OPTION A

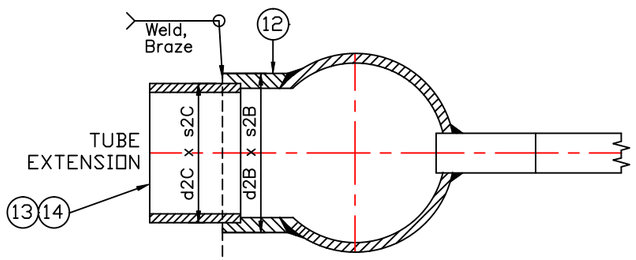

ASTM B543 C19400 EXTENSION | HEADER ASSEMBLY PER DRAWING 300-0000931372 SHEET 1 TYPE 304 STAINLESS STEEL

OPTIONAL COPPER ASTM B543 C19400 HEADER EXTENSION ARRANGEMENT

d2B X s2B CONNECTION	d2C X s2C EXTENESION
1/2" SCH.160	0.50" OD x 0.059" THK (12.7 MM OD x 1.50MM THK)
3/4" SCH.160	0.75" OD x 0.075" THK (19.05 MM OD x 1.90MM THK)
1" SCH.160	1.00" OD x 0.075" THK (25.4 MM OD x 1.90MM THK)
1-1/4" SCH.160	1.25" OD x 0.106" THK (31.8 MM OD x 2.70MM THK)
1-1/2" SCH.160	1.50" OD x 0.106" THK (38.1 MM OD x 2.70MM THK)
2" SCH.160	2.00" OD x 0.140" THK (50.8 MM OD x 3.55MM THK)

Note 1: d2 x s2 connection replaced with d2B x s2B.

BILL OF MATERIALS

POS	DESCRIPTION	IDENT.	MATERIAL	ASME STANDARD
2	CONNECTION (SEE SHEET 1)	d2 x s2	STAINLESS STEEL	SA-312-304/304L,316/316L
12	CONNECTION OR EXTENSION	d2B x s2B	STAINLESS STEEL	SA-312-304/304L,316/316L SCHEDULE 160
13	EXTENSION (MATERIAL OPTION 2)	d2C x s2C	COPPER	ASME SB543 UNS C19400 W061
14	EXTENSION (MATERIAL OPTION 3)	d2C x s2C	COPPER	ASME SB543 UNS C19400 WC55

NOTE 1: ONLY DUAL RATED 304/304L OR 316/316L MATERIAL TO BE USED.

EXTENSION DESIGN CODE	ASME B31.3 2018, ASME B31.5 2019
MAXIMUM ALLOWABLE WORKING PRESSURE (MAWP)	ASME SB543 UNS C19400 W061: 1015 PSIG (70 BARG) ASME SB543 UNS C19400 WC55: 1015 PSIG (70 BARG)
MAXIMUM ALLOWABLE EXTERNAL PRESSURE (MAEWP)	NONE
MAXIMUM DESIGN METAL TEMPERATURE	284°F (140°C)
MINIMUM DESIGN METAL TEMPERATURE	-148°F (-100°C)
IMPACT TEST	EXEMPT
CORROSION	NONE
NDE	CSA B52 REFRIGERANT GROUP A1,B1, A2,B2: NO RT. IN PROCESS PER ASME B31.3 PARA. 344.7 AND ASME B31.5 PARA. 536.6.2. CSA B52 REFRIGERANT GROUP A3,B3: 5% RT PER ASME B31.3 PARA 341.4.1(b) AND ASME B31.5 PARA 536.4.2.
HEAT TREATMENT	NONE
HYDROSTATIC TEST PRESSURE	1.5XMAWP
SERVICE	FOR NON-LETHAL SERVICE

COPPER EXTENSION MATERIAL OPTION 2 AND 3 – DETAIL Z
CONSTRUCTION DETAIL OPTION B

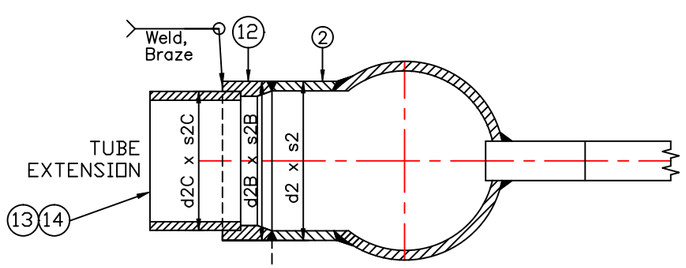

ASTM B543 C19400 EXTENSION | HEADER ASSEMBLY PER DRAWING 300-0000931372 SHEET 1 TYPE 304 STAINLESS STEEL

OPTIONAL COPPER ASTM B543 C19400 HEADER EXTENSION ARRANGEMENT

d2 X s2 CONNECTION	d2B X s2B EXTENSION	d2C X s2C EXTENESION
1/2" SCH.40	1/2" SCH.160	0.50" OD x 0.059" THK (12.7 MM OD x 1.50MM THK)
3/4" SCH.40	3/4" SCH.160	0.75" OD x 0.075" THK (19.05 MM OD x 1.90MM THK)
1" SCH.40	1" SCH.160	1.00" OD x 0.075" THK (25.4 MM OD x 1.90MM THK)
1-1/4" SCH.40	1-1/4" SCH.160	1.25" OD x 0.106" THK (31.8 MM OD x 2.70MM THK)
1-1/2" SCH.40	1-1/2" SCH.160	1.50" OD x 0.106" THK (38.1 MM OD x 2.70MM THK)
2" SCH.40	2" SCH.160	2.00" OD x 0.140" THK (50.8 MM OD x 3.55MM THK)

Note 1: d2 x s2 connection attached to d2B x s2B connection in accordance with ASME B31.3 Figure 328.4.2.

THIS IS PART OF CRN
0H20482.5ADD1
Technical Standards and Safety Authority
Boilers and Pressure Vessels Safety Program

SHEET 2 OF 2

MAX. PRESSURE 120bar 140°C -100°C

			escala	hoja	tamano DIN A1
			material		
			peso [kg]		
			notificacion		
			tipo	Heat Exchanger Stainless Steel	
			nombre	Heat Exchanger ST Steel 120bar	
			Baan-No.		
descripcion	fecha	nombre	numero de dibujo	300-0000931372 SHEET 2 OF 2	rev. 0
	fecha	nombre	cliente		
dib:	13.01.2020	jdelgado	proyecto/cantidad		
aprb:			orden / posicion		

Günther de México S.A. de C.V.
Rogelio González Caballero #1000
Parque Ind. Stiva Aeropuerto
66600 Apodaca, N.L., México
Tel. +52 81 8156 0600
www.guenther.com.mx