Technical Safety Authority of Saskatchewan

2202 2nd Avenue
Regina, SK S4R 1K3 Canada
1 (866) 530-8599
info@tsask.ca
www.tsask.ca

REGISTRATION OF A PRESSURE FITTING DESIGN

20-Sep-22

TSSA
345 Carlingview Drive
Toronto, Ontario
M9W 6N9

Attention: Tanya Francis

File Number: 13262 [0 F]

Re: Manufacturer: Guntner de Mexico S.A.de C.V.
Item: Heat Exchanger
Catalog or Drawing: Per Scope of Registration & 300-0000931372 Rev. 0

TSASK Codes and Standards Compliance has registered the design listed above in accordance with The Boiler and Pressure Vessel Act and Regulations and CSA B51. The Canadian Registration Number (CRN) is:

0H20482.53 Expiry Date: June 25, 2028

Please note that every fitting shall be constructed in strict accordance with the registered design.

Fitting registrations are required to be resubmitted for validation after ten (10) years from the registration date in accordance with CSA B51, Clause 4.2.1.

Should you require anything further, please do not hesitate to contact the Codes and Standards Compliance Office at your convenience.

Yours truly,

Athan Syrgiannis, P.Eng.
Codes and Standards Compliance

Remarks:
A valid quality control program must be maintained at the production facility for the fitting registration to remain valid until the expiry date.

Addition to existing registration - previously registered in Saskatchewan through CSA.

Technical Safety Authority of Saskatchewan

2202 2nd Ave.
Regina, SK S4R 1K3
PH: (306)798-7112 Toll Free: (866)530-8599
FAX: (306)787-9273 Toll Free: (866)760-9255
Email: boilerpermits@tsask.ca
Website: www.tsask.ca

Statutory Declaration (Registration of Fittings)

TSK-1008

I. Declaration Information

I, JAMISON DITTHARDT ,

PRODUCT AND SOLUTIONS DEVELOPMENT MANAGER
(company title, e.g. vice president, plant manager, chief engineer)
(must be in a position of authority in the manufacturing plant where the fitting is produced)

In this manufa is it will appear GÜNTNER

of: GUNTNER DE MEXICO, S.A. DE C.V.
(name of manufacturer)

located at: Av. Rogelio Gonzalez Caballero No. 1000, Parque Industrial Stiva Aeropuerto, 66600 Apodaca, N.L., Mexico
(Plant Address – Apt/Street) (City,Prov) (Postal Code)

do solemnly declare that the fittings listed hereinunder, which are subject to the ***Saskatchewan Boiler and Pressure Vessel Safety Act*** (check one)

- (●) Comply with the requirements of ASME SECTION VIII-1, ASME B31.3, B31.5 (title of recognized North American Standard) which specifies the dimensions, Materials of construction, pressure / temperature ratings and identification marking of the fittings, or
- ( ) Are not covered by the provisions of a recognized North American standard and are therefore manufactured to comply with _____ as supported by the attached data which identifies the dimensions, materials of construction, pressure / temperature ratings and the basis for such ratings, and the marking of the fittings for identification.

I further declare that the manufacturer of these fittings is controlled by a quality control program which has been verified by the following authority, TUV-SUD ISO 9001 as being suitable for the manufacturer of these fittings to the stated standard. The fittings covered by this declaration, for which I seek registration, are CATEGORY H - HEAT EXCHANGER

In support of this application, the following information, calculations and / or test data are attached:

SCOPE OF CRN, DRAWINGS, CALCULATIONS, REPORTS

II. Declaration

DECLARED before me at Chicago In the Cook of ILLINOIS
this 17 day of Dec , 2020

Jamison Ditthardt
(print name)

(Signature)

(Signature of Commissioner of Oaths)

OFFICIAL SEAL
MELISSA SANCHEZ
NOTARY PUBLIC - STATE OF ILLINOIS
MY COMMISSION EXPIRES:09/30/23

III. Office Use Only

To the best of my knowledge and belief, the application meets the requirements of the ***Boiler and Pressure Vessel Safety Act*** and CSA B51, Clause 4.2, and is accepted for registration in Category _____

(Registration Number) (Date Registered – MM DD YYYY) (Expiry Date – MM DD YYYY)
(For the Administrator / Chief Inspector)

GUNTNER DE MEXICO S.A. DE C.V.
ROGELIO GONZALEZ CABALLERO NO. 1000
PARQUE INDUSTRIAL STIVA AEROPUERTO
APODACA, NUEVO LEON
MEXICO CP 66600

19-Mar-22

THIS IS PART OF CRN
0H20482.5ADD1
Technical Standards and Safety Authority
Boilers and Pressure Vessels Safety Program

SCOPE OF CRN REGISTRATION

Product Description	Drawing No.	Design Code	MAWP at MAWT	Material Specification	Header "d2" Connection Sizes	Report Number
Heat Exchanger	300-0000931372 Rev. 0	ASME Section VIII-1	120 barg at 140°C / 1740 psig at 284°F	Stainless Steel **(Note 3)** ASME SA312-304/304L/316/316L, ASME SA249-304/304L/316/316L, ASME SA240-304/304L/316/316L, ASME SA479-304/304L/316/316L, ASME SA182-304/304L/316/316L, ASME SA403-304/304L/316/316L	1/2" Sch. 40, 3/4" Sch. 40, 1" Sch. 40, 1-1/4" Sch. 40 1-1/2" Sch. 40 2" Sch. 40 2-1/2" Sch. 40	R-1227A Rev. 0
Header "d2" Extensions	Extensions for Heat Exchanger shown on drawing 300-0000931372 Rev. 0	ASME B31.3, ASME B31.5.	120 barg at 140°C / 1740 psig at 284°F	Carbon Steel ASTM A53-E/B, ASTM A106-B	1/2" Sch. 40, 3/4" Sch. 40, 1" Sch. 40, 1-1/4" Sch. 40 1-1/2" Sch. 40 2" Sch. 40 2-1/2" Sch. 40	R-1227B Rev. 0
Header "d2" Extensions	Extensions for Heat Exchanger shown on drawing 300-0000931372 Rev. 0	ASME B31.3, ASME B31.5.	70 barg at 140°C / 1015 psig at 284°F	Copper ASTM B543 UNS C19400 W061	1/2" x 1.5 mm wall thk. 3/4" x 1.9 mm wall thk. 1" x 1.9 mm wall thk. 1-1/4" x 2.7 mm wall thk. 1-1/2" x 2.7 mm wall thk. 2" x 3.55 mm wall thk.	R-1227B Rev. 0
Header "d2" Extensions	Extensions for Heat Exchanger shown on drawing 300-0000931372 Rev. 0	ASME B31.3, ASME B31.5.	70 barg at 140°C / 1015 psig at 284°F	Copper ASTM B543 UNS C19400 WC55	1/2" x 1.5 mm wall thk. 3/4" x 1.9 mm wall thk. 1" x 1.9 mm wall thk. 1-1/4" x 2.7 mm wall thk. 1-1/2" x 2.7 mm wall thk. 2" x 3.55 mm wall thk.	R-1227B Rev. 0

Note 1: MAWP = Maximum Allowable Working Pressure, MAWT = Maximum Allowable Working Temperature,
Note 2: For low temperature operation the products shall conform to the rules of the applicable codes under which they are used.
Note 3: In all cases stainless steel shall be dual rated Type 304/304L or Type 316/316L.

Technical Safety Authority of Saskatchewan
Registration No. 0H20482.53
File No. 13262
Registered
Date: September 20, 2022
Expiry Date: June 25, 2028
Codes & Standards Compliance Office

HEAT EXCHANGER WITH CAPILLAR

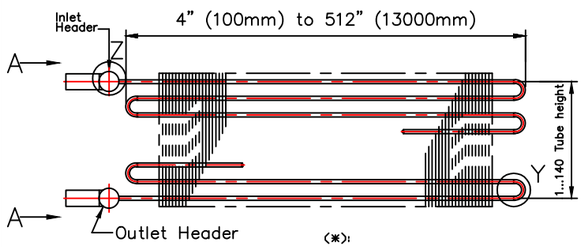

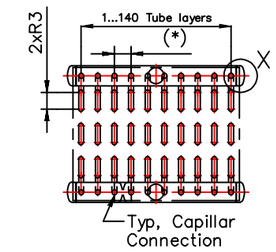

SECTION A–A

(*):
HEADER SIZES 1/2" THRU 4"
For tube 0.472" (12.00mm) distance is 1.969" (50mm)
For tube 0.591" (15.00mm) distance is 1.969" (50mm)

Technical Safety Authority of Saskatchewan
Registration No. 0H20482.53
File No. 13262
Registered
Date: September 20, 2022
Expiry Date: June 25, 2028
Codes & Standards Compliance Office

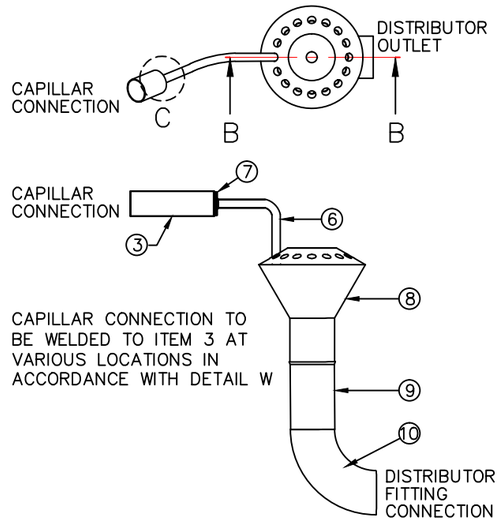

BILL OF MATERIALS

POS	DESCRIPTION	IDENT.	MATERIAL	ASME STANDARD
1	HEADER	d1 x s1	STAINLESS STEEL	SA-312-304/304L,316/316L
2	CONNECTION (SEE SHT 2 OPTIONS)	d2 x s2	STAINLESS STEEL	SA-312-304/304L,316/316L
3	CORE TUBE	d3 x s3	STAINLESS STEEL	SA-249-304/304L,316/316L
4	ELBOW	d3 x s3	STAINLESS STEEL	SA-249-304/304L,316/316L
5	HEADER FLAT PLATE	d5 X s5	STAINLESS STEEL	SA-240-304/304L,316/316L
6	CAPILLAR	d6 X s6	STAINLESS STEEL	SA-249-304/304L,316/316L
7	CAPILLAR PLATE	d7 X s7	STAINLESS STEEL	SA-479-304/304L,316/316L
8	DISTRIBUTOR COMPLETE WITH CRN		STAINLESS STEEL	SA-182-304/304L,316/316L
9	DISTRIBUTOR PIPE	d2 x s2	STAINLESS STEEL	SA-312-304/304L,316/316L
10	DISTRIBUTOR FITTINGS	d2 x s2	STAINLESS STEEL	SA-403-304/304L,316/316L

NOTE 1: SEE SHEET 2 FOR OPTIONAL d2 CONNECTION EXTENSIONS
NOTE 2: ONLY DUAL RATED 304/304L OR 316/316L MATERIAL TO BE USED.

VALUES FOR a IN INCHES (REQUIRED WELD SIZE)

MATERIAL		CONNECTION (d2 X s2 OR d3 X s3) NOTE: Heavier wall pipe or tube may be substituted.	HEADER NOMINAL PIPE SIZE (d1) 1/2" Sch.40	3/4" Sch.40	1" Sch.40	1-1/4" Sch.40	1-1/2" Sch.40	2" Sch.40	2" Sch.80	2-1/2" Sch.40	3" Sch.80	4" Sch.80
TYPE 304/304L SS DUAL RATED, TYPE 316/316L SS DUAL RATED	d3	0.472" X 0.028" (12MM X 0.70MM)	0.05	0.05	0.05	0.05	0.05	0.05		0.05	0.05	0.05
	d3	0.591" X 0.039" (15MM X 1.00MM)	0.07	0.07	0.07	0.07	0.07		0.07	0.07	0.07	0.07
	d3	0.591" X 0.032" (15MM X 0.80MM)	0.06	0.06	0.06	0.06	0.06		0.06	0.06	0.06	0.06
	d2	1/2" SCH.40			0.11	0.11	0.11	0.13	0.11	0.15	0.11	0.20
	d2	3/4" SCH.40				0.12	0.12	0.20	0.12	0.21	0.17	0.28
	d2	1" SCH.40					0.14	0.21	0.14	0.23	0.19	0.32
	d2	1-1/4" SCH.40						0.29	0.22*	0.30	0.26	0.39
	d2	1-1/2" SCH.40								0.34	0.30	0.44
	d2	2" SCH.40									0.44*	0.53
	d2	2-1/2" SCH.40										0.53

NOTE 1: CORE TUBES(d3) ATTACHED TO HEADER IN ACCORDANCE WITH FIGURE UW-16.1(W-1).

NOTE 2: THE WELD SIZES STATED TO ATTACH d2 TO d1 ARE DETERMINED IN ORDER TO MEET THE REINFORCEMENT REQUIREMENTS SPECIFIED IN UG-37. IN ACCORDANCE WITH UG-36(C)(3) SMALLER OR EQUAL WELD SIZES IN ACCORDANCE WITH FIGURE UW-16.1(A) MAY BE USED IF IT CAN BE CONFIRMED THAT THE NOZZLE DOES PASS THROUGH A CATEGORY A JOINT. THIS OPTION DOES NOT APPLY TO WELD SIZES FOLLOWED BY A *. FOR WELD SIZES FOLLOWED BY A * THE WELD SIZE SHOWN SHALL BE USED IN ALL CIRCUMSTANCES.

DETAIL Z Connection – Header – Stub

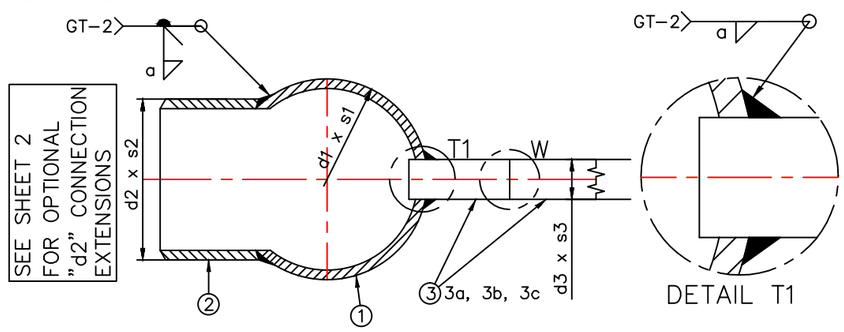

DETAIL W Stub – Core Tube

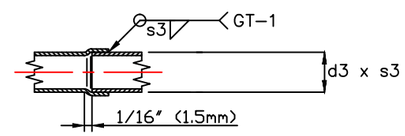

DETAIL X Connection – Flat Plate

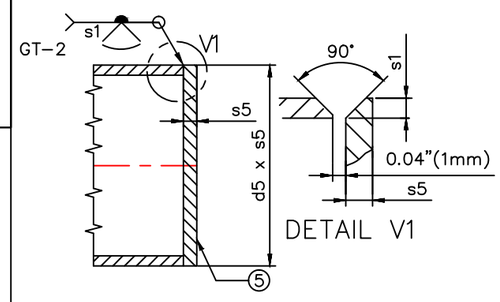

HEADER(1) AND CONNECTION(2) COMBINATIONS AND HEADER FLAT PLATE(5) DETAILS		
HEADER (1) d1xs1	MAX CONNECTION SIZE (2) d2xs2	FLAT PLATE MIN. THK. TP (5) d5xs5
1/2" SCH.40		0.840" x 0.250"
3/4" SCH.40		1.050" x 0.250"
1" SCH.40	1/2" SCH.40	1.315" x 0.312"
1-1/4" SCH.40	3/4" SCH.40	1.660" x 0.438"
1-1/2" SCH.40	1" SCH.40	1.900" x 0.438"
2" SCH.40/80	1-1/4" SCH.40	2.375" x 0.438"
2-1/2" SCH.40	1-1/2" SCH.40	2.875" x 0.563"
3" x SCH.80	2" SCH.40	3.500" x 0.625"
4" SCH.80	2-1/2" SCH.40	4.500" x 0.750"

NOTE: Available connection sizes d2 x s2 are: 1/2" SCH.40, 3/4" SCH.40, 1" SCH.40, 1-1/4" SCH. 40, 1-1/2" SCH. 40, 2" sch. 40, 2-1/2" SCH. 40.

CORE TUBE (3) COMBINATIONS AND DETAILS			
d3	s3	R3	H
0.472" (12.00 mm)	0.028" (0.70mm)	0.689" (17.50 mm)	0.807" (20.50 mm)
0.472" (12.00 mm)	0.028" (0.70mm)	0.984" (25.00 mm)	1.220" (31.00 mm)
0.472" (12.00 mm)	0.028" (0.70mm)	1.575" (40.00 mm)	1.810" (46.00 mm)
0.591" (15.00 mm)	0.032" (0.80mm)	0.689" (17.50 mm)	0.984" (25.00 mm)
0.591" (15.00 mm)	0.032" (0.80mm)	0.984" (25.00 mm)	1.280" (32.50 mm)
0.591" (15.00 mm)	0.039" (1.00mm)	0.689" (17.50 mm)	0.984" (25.00 mm)
0.591" (15.00 mm)	0.039" (1.00mm)	0.984" (25.00 mm)	1.280" (32.50 mm)

CORE TUBE(3), CAPILLAR(6) AND CAPILLAR PLATE (7) DETAILS		
CORE TUBE (3) d3Xs3	CAPILLAR (6) d6xs6	CAPILLAR PLATE (7) d7xs7
0.472" X 0.039" MIN. THK. 12.00MM X 1.00MM MIN. THK.	0.157" x 0.039" 4.00MM X 1.00MM	0.374" X 0.197" 9.52MM X 5MM
	0.197" X 0.039" 5.00MM X 1.00MM	
	0.236" X 0.039" 6.00MM X 1.00MM	
0.591" X 0.047" MIN. THK. 15.00MM X 1.20MM MIN. THK.	0.157" x 0.039" 4.00MM X 1.00MM	0.472" X 0.197" 12.00MM X 5MM
	0.197" X 0.039" 5.00MM X 1.00MM	
	0.236" X 0.039" 6.00MM X 1.00MM	

DETAIL C Core Tube–Plate–Capillary

NOTE: CAPILLAR TUBES(d6) ATTACHED TO CAPILLAR PLATE IN ACCORDANCE WITH FIGURE UW-16.1(I).

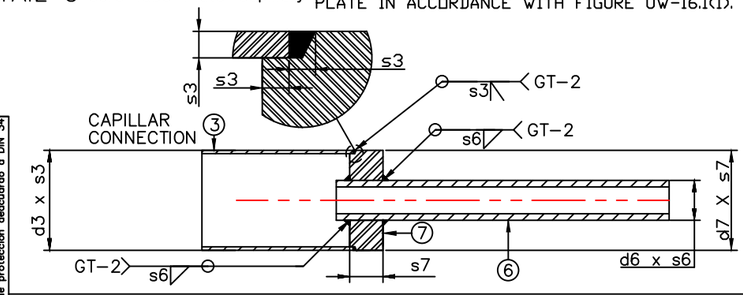

DETAIL Y Core Tube – Elbows

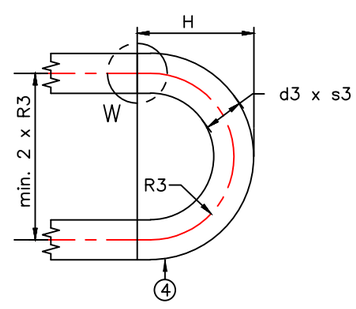

SECTION B–B Capillary – Distributor – Tube – Elbow

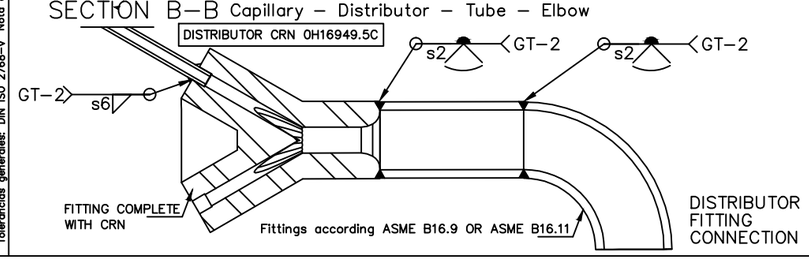

DESIGN CODE	ASME SECTION VIII-DIV.1, 2021
MAXIMUM ALLOWABLE WORKING PRESSURE (MAWP)	1740 PSIG (120 BARG)
MAXIMUM ALLOWABLE EXTERNAL PRESSURE (MAEWP)	NONE
MAXIMUM DESIGN METAL TEMPERATURE	284°F (140°C)
MINIMUM DESIGN METAL TEMPERATURE	-148°F (-100°C)
IMPACT TEST	NOT REQUIRED ACCORDING TO UHA-51(D) FOR MATERIALS
CORROSION	ACCORDING TO UG-25(D) CORROSION IS ONLY SUPERFICIAL NATURE
NDE	CSA B52 REFRIGERANT GROUP A1,B1, A2,B2: NO RT. IN PROCESS PER ASME B31.3 PARA. 344.7 AND ASME B31.5 PARA. 536.6.2. CSA B52 REFRIGERANT GROUP A3,B3: 5% RT PER ASME B31.3 PARA 341.4.1(b) AND ASME B31.5 PARA 536.4.2.
HEAT TREATMENT	NONE
HYDROSTATIC TEST PRESSURE	1.3XMAWP = 2262 PSIG (156 BARG)
SERVICE	FOR NON-LETHAL SERVICE
UNIT CONTENTS	ANY REFRIGERANT ACCORDING TO SAFTEY CLASSIFICATION PER ANSI/ASHRAE 34-2001, CO2, NH3

R-1227

REGISTRATION CRN **0H20482.5ADD1**
COVERS THE PIPING SYSTEM ONLY AND DOES NOT INCLUDE REGISTRATION OF BOILERS, PRESSURE VESSELS AND FITTINGS REQUIRED UNDER THE BOILERS AND PRESSURE VESSELS REGULATIONS OF TECHNICAL STANDARDS AND SAFETY ACT
June 1, 2022. TSSA

SHEET 1 OF 2

MAX. PRESSURE 120bar 140°C -100°C

Tabla de tolerancias
Piezas de lámina: DIN 8570 – TE5/A00/006/94/KS
Soldadura: DIN EN 25817
Tolerancias generales: DIN ISO 2768-v Nota de protección descuardo a DIN 34

Güntner de México S.A. de C.V.
Rogelio González Caballero #1000
Parque Ind. Silva Aeropuerto
66600 Apodaca, N.L. México
Tel. + 52 81 8156 0600
www.guentner.com.mx

descripcion	fecha	nombre
dib:	13.01.2020	jDelgado
aprb:		

escala	
material	
peso [kg]	
notificacion	
tipo	Heat Exchanger Stainless Steel
nombre	Heat Exchanger ST Steel 120bar
Baan-No.	
numero de dibujo	300-0000931372 SHEET 1 OF 2
rev.	0
cliente	
proyecto/cantidad	
orden / posicion	

hoja | tamano DIN A1

CARBON STEEL EXTENSION MATERIAL OPTION 1 – DETAIL Z

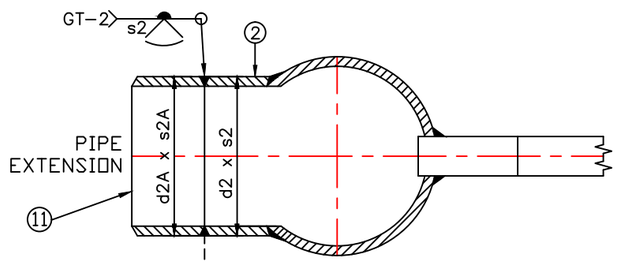

ASTM A53-E/B EXTENSION | HEADER ASSEMBLY PER DRAWING 300-0000931372 SHEET 1 TYPE 304 STAINLESS STEEL

OPTIONAL CARBON STEEL ASTM A53-E/B HEADER EXTENSION ARRANGEMENT

d2 X s2 CONNECTION	d2A X s2A EXTENESION
(Note 1)	1/2" SCH.40
3/4" SCH.40	3/4" SCH.40
1" SCH.40	1" SCH.40
1-1/4" SCH.40	1-1/4" SCH.40
1-1/2" SCH.40	1-1/2" SCH.40
2" SCH.40	2" SCH.40
2-1/2" SCH. 40	2-1/2" SCH. 40

Note 1: d2 x s2 connection wall thickness the same as shown on sheet 1 of drawing

BILL OF MATERIALS

POS	DESCRIPTION	IDENT.	MATERIAL	ASME STANDARD
2	CONNECTION	d2 x s2	STAINLESS STEEL	SA-312-304/304L,316/316L
11	EXTENSION (OPTION 1)	d2A x s2A	CARBON STEEL	ASME SA-53-E/B (Note 2)

NOTE 1: ONLY DUAL RATED 304/304L OR 316/316L MATERIAL TO BE USED.
NOTE 2: NPS 2" PIPE TO BE SA106-B

EXTENSION DESIGN CODE	ASME B31.3 2018, ASME B31.5 2019
MAXIMUM ALLOWABLE WORKING PRESSURE (MAWP)	1740 PSIG (120 BARG)
MAXIMUM ALLOWABLE EXTERNAL PRESSURE (MAEWP)	NONE
MAXIMUM DESIGN METAL TEMPERATURE	284°F (140°C)
MINIMUM DESIGN METAL TEMPERATURE	-20°F (-29°C) FOR CARBON STEEL EXTENSION
IMPACT TEST	EXEMPT
CORROSION	NONE
NDE	CSA B52 REFRIGERANT GROUP A1,B1, A2,B2: NO RT. IN PROCESS PER ASME B31.3 PARA. 344.7 AND ASME B31.5 PARA. 536.6.2. CSA B52 REFRIGERANT GROUP A3,B3: 5% RT PER ASME B31.3 PARA 341.4.1(b) AND ASME B31.5 PARA 536.4.2.
HEAT TREATMENT	NONE
HYDROSTATIC TEST PRESSURE	1.5XMAWP = 2610 PSIG (180 BARG)
SERVICE	FOR NON-LETHAL SERVICE

COPPER EXTENSION MATERIAL OPTION 2 AND 3 – DETAIL Z
CONSTRUCTION DETAIL OPTION A

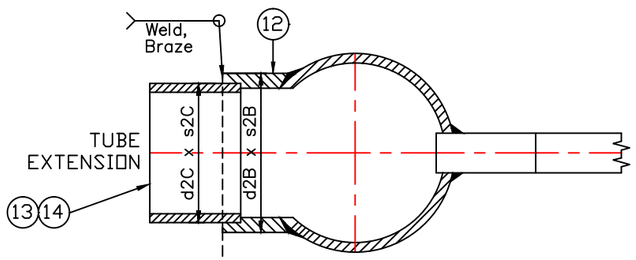

ASTM B543 C19400 EXTENSION | HEADER ASSEMBLY PER DRAWING 300-0000931372 SHEET 1 TYPE 304 STAINLESS STEEL

OPTIONAL COPPER ASTM B543 C19400 HEADER EXTENSION ARRANGEMENT

d2B X s2B CONNECTION	d2C X s2C EXTENESION
1/2" SCH.160	0.50" OD x 0.059" THK (12.7 MM OD x 1.50MM THK)
3/4" SCH.160	0.75" OD x 0.075" THK (19.05 MM OD x 1.90MM THK)
1" SCH.160	1.00" OD x 0.075" THK (25.4 MM OD x 1.90MM THK)
1-1/4" SCH.160	1.25" OD x 0.106" THK (31.8 MM OD x 2.70MM THK)
1-1/2" SCH.160	1.50" OD x 0.106" THK (38.1 MM OD x 2.70MM THK)
2" SCH.160	2.00" OD x 0.140" THK (50.8 MM OD x 3.55MM THK)

Note 1: d2 x s2 connection replaced with d2B x s2B.

BILL OF MATERIALS

POS	DESCRIPTION	IDENT.	MATERIAL	ASME STANDARD
2	CONNECTION (SEE SHEET 1)	d2 x s2	STAINLESS STEEL	SA-312-304/304L,316/316L
12	CONNECTION OR EXTENSION	d2B x s2B	STAINLESS STEEL	SA-312-304/304L,316/316L SCHEDULE 160
13	EXTENSION (MATERIAL OPTION 2)	d2C x s2C	COPPER	ASME SB543 UNS C19400 W061
14	EXTENSION (MATERIAL OPTION 3)	d2C x s2C	COPPER	ASME SB543 UNS C19400 WC55

NOTE 1: ONLY DUAL RATED 304/304L OR 316/316L MATERIAL TO BE USED.

EXTENSION DESIGN CODE	ASME B31.3 2018, ASME B31.5 2019
MAXIMUM ALLOWABLE WORKING PRESSURE (MAWP)	ASME SB543 UNS C19400 W061: 1015 PSIG (70 BARG) ASME SB543 UNS C19400 WC55: 1015 PSIG (70 BARG)
MAXIMUM ALLOWABLE EXTERNAL PRESSURE (MAEWP)	NONE
MAXIMUM DESIGN METAL TEMPERATURE	284°F (140°C)
MINIMUM DESIGN METAL TEMPERATURE	-148°F (-100°C)
IMPACT TEST	EXEMPT
CORROSION	NONE
NDE	CSA B52 REFRIGERANT GROUP A1,B1, A2,B2: NO RT. IN PROCESS PER ASME B31.3 PARA. 344.7 AND ASME B31.5 PARA. 536.6.2. CSA B52 REFRIGERANT GROUP A3,B3: 5% RT PER ASME B31.3 PARA 341.4.1(b) AND ASME B31.5 PARA 536.4.2.
HEAT TREATMENT	NONE
HYDROSTATIC TEST PRESSURE	1.5XMAWP
SERVICE	FOR NON-LETHAL SERVICE

COPPER EXTENSION MATERIAL OPTION 2 AND 3 – DETAIL Z
CONSTRUCTION DETAIL OPTION B

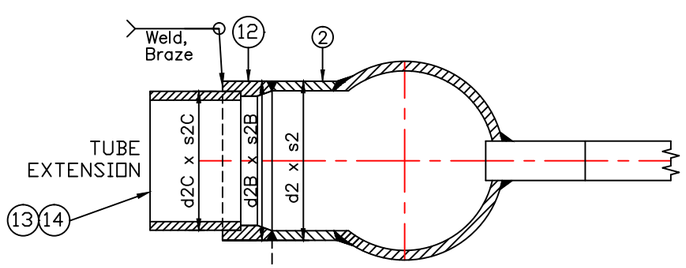

ASTM B543 C19400 EXTENSION | HEADER ASSEMBLY PER DRAWING 300-0000931372 SHEET 1 TYPE 304 STAINLESS STEEL

OPTIONAL COPPER ASTM B543 C19400 HEADER EXTENSION ARRANGEMENT

d2 X s2 CONNECTION	d2B X s2B EXTENSION	d2C X s2C EXTENESION
1/2" SCH.40	1/2" SCH.160	0.50" OD x 0.059" THK (12.7 MM OD x 1.50MM THK)
3/4" SCH.40	3/4" SCH.160	0.75" OD x 0.075" THK (19.05 MM OD x 1.90MM THK)
1" SCH.40	1" SCH.160	1.00" OD x 0.075" THK (25.4 MM OD x 1.90MM THK)
1-1/4" SCH.40	1-1/4" SCH.160	1.25" OD x 0.106" THK (31.8 MM OD x 2.70MM THK)
1-1/2" SCH.40	1-1/2" SCH.160	1.50" OD x 0.106" THK (38.1 MM OD x 2.70MM THK)
2" SCH.40	2" SCH.160	2.00" OD x 0.140" THK (50.8 MM OD x 3.55MM THK)

Note 1: d2 x s2 connection attached to d2B x s2B connection in accordance with ASME B31.3 Figure 328.4.2.

THIS IS PART OF CRN
0H20482.5ADD1
Technical Standards and Safety Authority
Boilers and Pressure Vessels Safety Program

SHEET 2 OF 2

MAX. PRESSURE 120bar 140°C -100°C

escala		hoja	tamano DIN A1
material			
peso [kg]			
notificacion			
tipo	Heat Exchanger Stainless Steel		
nombre	Heat Exchanger ST Steel 120bar		
Baan-No.			
numero de dibujo	300-0000931372 SHEET 2 OF 2	rev.	0
cliente			
proyecto/cantidad			
orden / posicion			

descripcion | fecha | nombre

	fecha	nombre
dib:	13.01.2020	jdelgado
aprb:		

Güntner de México S.A. de C.V.
Rogelio González Caballero #1000
Parque Ind. Stiva Aeropuerto
66600 Apodaca, N.L. México
Tel. + 52 81 8156 0600
www.guentner.com.mx